M3.12 CURB & GUTTER DEPRESSED AT DRIVEWAY & CURB-RAMP

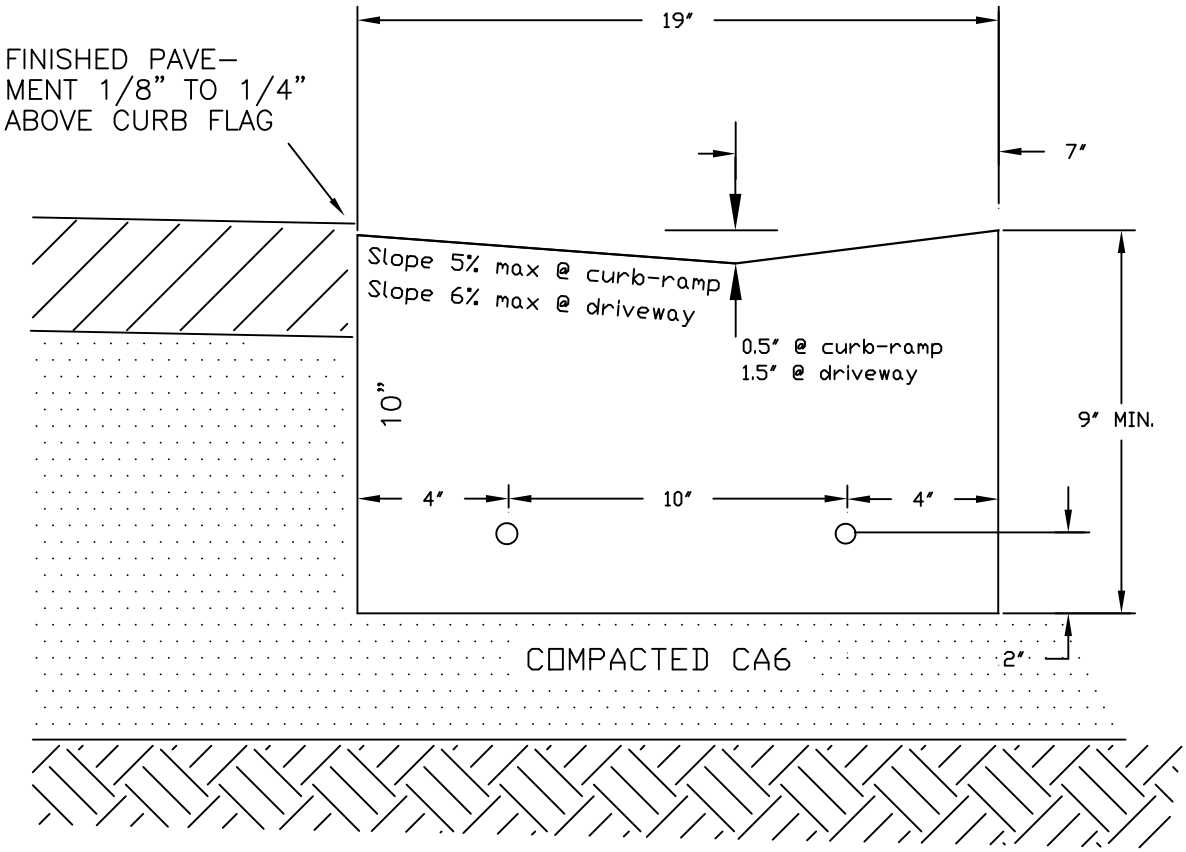

- EXTEND PAVEMENT BASE COURSE TO PROVIDE A MINIMUM 6" LAYER OF COMPACTED CA6 UNDER THE CURB.
- NO.5 REBARS, 10' LONG CENTERED OVER UTILITY TRENCHES AND 2 NO.5 DOWEL BARS AT EXPANSION JOINTS EVERY 60', TOLL AND SAW CONTRACTION JOINTS EVERY 15', 3" DEPTH.
- FULL FORMS REQUIRED FOR THE CURB AND GUTTER.
- AFTER REMOVING THE FORMS, THE GAP SHALL BE FILLED WITH CONCRETE SLURRY MIX.
- STREET PATCH SHALL HAVE A MINIMUM WIDTH OF 2'.

filename-ac: Std Curb M312 Depressed

REVISIONS:

1. 2/14/2025	2. 1/13/2026

Hanover Park USA

M3.12 CURB & GUTTER DEPRESSED
STANDARD DETAIL